HELICOPTER
REFUELLING SYSTEMS

More than 30 years of experience makes Imenco one of the leading companies in the field and we have set the standard for high quality, cost efficient and customer orientated Aviation Fuelling Systems.

imenco.com

Standard Dispenser Unit

Our basic Dispenser Unit is designed to fulfill requirements for Helicopter Fuelling Systems worldwide and can be upgraded to project specific requirements.

Our design complies with all international regulations. Most common are DNV, ABS, Lloyd, RMRS, CAP 437, NOG and OSCG. Filtration system is approved according to EI 1581 and EI 1583. Top grade materials and design solutions make our units virtually maintenance free, safe and easy to operate under all weather conditions.

For further information email **aviation@imenco.com**

AVIATION | DIVING | ENGINEERING | SUBSEA MECHANICAL | SUBSEA ELECTRONICS | TOPSIDE | WORKSHOP

imenco
SMART SOLUTIONS

Contact us for additional information or to get a quotation. Send an email to aviation@imenco.com or find personal contact info on our website.

imenco.com

HELICOPTER
REFUELLING SYSTEMS

MATERIALS

- SS316L Baseframe & Driptray
- SS316L Piping, Vessel & Valves
- Enclosure in offshore Alu

ADVANTAGES

- Flow 225 l/min
- Pressure 8.3 Barg
- Design lifetime 25 years

OPTIONS

- 20m – 50m Hose length
- Sample glass
- Storage space for samples & sampling equipment
- Starter panel for El. Motors or pneumatic motors
- Connection for recycle unit
- Underwing nozzle with adapter

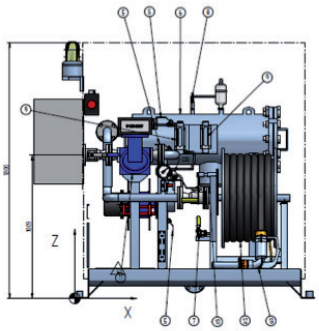

FRONT VIEW

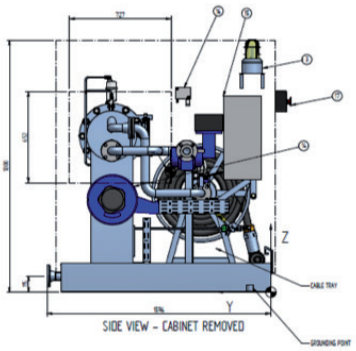

SIDE VIEW - CABINET REMOVED

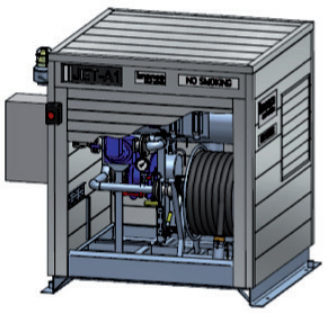

ISO VIEW

WEIGHT AND DIMENSIONS

Model	**Weight** (kg) Dry/Wet	**L** (mm)	**W** (mm)	**H** (mm)
IDS1-12-30	825/935	1596	1684	1200
IDS1-15-30	840/950	1596	1684	1500
IDS1-18-30	885/960	1596	1684	1800

For further information email **aviation@imenco.com**

ISO 9001 CERTIFIED COMPANY